Times-Virginian Letters To The Editor

Criminals

The Criminal Nature Of Communism

President Ronald Reagan was the first leader of the western democracies who after the World War II showed unusual courage to accuse the Soviet Union of reserving the right "to commit any crime, to lie, to cheat" in persistent campaign to promote global revolution and one-world communist dictatorship. In his first news conference since taking office, the President characterized detente as the one-way street the Soviet Union has used to pursue its own ends.

Unfortunately, since World War II the Soviet Union has acted as the only power to mold the world events and to carry out the only consistent program although a criminal one. In fact, the global aggression and crimes committed by the authorities of the Soviet Union overshadow those of Adolf Hitler. The countries of the West have failed to cope with the Russian communists because of lack of direction and any real leadership. Aleksandr I. Solzhenitsyn has frequently warned us that the military weakness of the West and the cowardice of its leaders invite the Soviet Union to start a nuclear war.

President Reagan reminds us of the real meaning of detente--a lessening of tensions between nations. In fact in too many cases the leaders of the West were grovelling before the Russian communists at the expense of the inalienable rights of independence of the captive peoples in Eastern Europe. Contrary to those leaders, Reagan understands the criminal nature of communism. He realizes that the military strength of the U.S. should be restored by all means, because the leaders of the Soviet Union understand and respect only force.

It is refreshing to see that Reagan said that the Soviet goals and activities should be taken in account by the U.S. when negotiating with the Russians on arms limitations and other matters. In order to achieve the lessening of tension between the two super powers, the causes of tensions--colonialism, imperialism, and genocide--must be removed in Eastern Europe and Aghanistan.

Sincerely yours,
Dr. Alexander V. Berkis

Baseball season

Editor:

Baseball season is rapidly approaching. The conclusion and highlight of every season is a World Series. Such is the case with Dixie Baseball, only more so. In the Dixie Baseball program there are four World Series, one for each age group. They are Dixie Youth (11-12), Dixie Boys (13-14), Dixie Pre-Majors (15-16) and Dixie Majors (17-18).

Unlike the Little League program which holds its World Series in Williamsport, Pennsylvania, annually, the Dixie World Series are hosted by different states and different localities each year. Over the past twenty years, (the entire history of Dixie Baseball as now organized), Virginia has never hosted a World Series. This is a dismal record to say the least. The Madison Heights Youth Baseball Association, together with the help of all of Central Virginia, would like to alter that record.

The MHYBA Board of Directors has voted to bid on the 1982 Dixie Pre-Majors World Series at the National Board Meeting in August, 1981. This bid will only be made if we can generate sufficient support between now and June 1, 1981, our decision deadline date.

Tentative arrangements have been made for the physical facilities necessary to host a World Series (all facilities are in Lynchburg). The manpower commitment to run the Series has been made. The final and most important resource now required is financial support. Since the host pays the expenses of the eleven visiting teams plus officials, the price tag is quite high. The projected budget for the Series in question is $65,000.

This week, a letter will be mailed to the business community of Central Virginia requesting pledges of support. We hope that every recipient will not only read the letter and carefully consider the uniqueness of this event, but will also realize that they should be heard from also too, many years of silence, and thus, make a pledge of financial support. Certainly, any private citizen who wishes to pledge support is encouraged to do so.

With everyone's help, Central Virginia will enjoy a first class World Series in August, 1982. Thank you.

Bid Committee
World Series '82
Donald W. Johnson, Chairman
P. O. Box 1982
Madison Heights, Va. 24572

Maynard K. Bean

Bean named head of schools

Maynard K. Bean, of Powhatan, a 1956 graduate of Appomattox High School has been named Superintendent of Powhatan County School System. He will assume the responsibilities of the new position July 1.

Prior to this appointment Bean held the position of principal at the Powhatan High School, teaching and administrative positions in the Richmond Public School System.

A native of Globe, N. C., Bean, with his family moved to Concord in 1950. His mother, Mrs. M. E. Bean continues to make her home at Concord. He is married to the former Doris Clapp of Evergreen.

Bean received both his undergraduate and graduate degrees from the University of Richmond; he holds a post-graduate degree from VPI/SU.

Dr. Powell addresses women

THE APPOMATTOX JUNIOR Woman's Club, Inc. held its regular monthly meeting Tuesday, January 27, 1981, at the Farmers Bank Branch building. Guest speaker for the meeting was Dr. Kenneth Powell from Appomattox who spoke on Juvenile Diabetes. Fighting diabetes is one of the clubs special projects this year and members attending this meeting were informed about this disease.

THE TIMES-VIRGINIAN
USPS-630-800
PUBLISHED EVERY WEDNESDAY BY ATLANTIC PUBLICATIONS, INC.
IN HISTORIC APPOMATTOX COUNTY
APPOMATTOX, VIRGINIA 24522
ESTABLISHED IN 1892

Bill Sherrod ..... Editor and General Manager
Frances Paulette ..... Assistant Editor
Allen Austin ..... Advertising Manager
Melanie Fraley ..... Classified

Entered as second-class matter at the Post Office at Appomattox, Virginia,under the Act of Congress of March 3, 1879

Address all correspondence to THE TIMES-VIRGINIAN, P. O. Box 2097, Appomattox, Virginia 24522

Subscription rates $8.00 a year in Appomattox...and all adjoining counties.
All others $10.00, payable in advance.
Member, Virginia Press Association
Single copies, $.15 each

Adult Ed starts

The Adult Education Program for second semester for the most part got underway this week in the Appomattox County School Division.

"Adults who have not registered and who desire to take a class may still enroll in any of the classes offered this semester.

Classes for adults are taught on an individualized basis and adults will not be at any disadvantages by enrolling now," states R. B. Carter, Adult Education Coordinator. In several classes additional enrollment is needed if the class is to continue.

The Appomattox County School Board reserves the right to cancel classes where enrollment is less than ten persons.

A variety of classes for adults are being offered and adults are urged to take advantage of the many opportunities offered through the Adult Education Program.

VICA club meets

The Appomattox County VICA Club held its regular monthly meeting on Feb. 4.

The main order of business was to talk about the clubs money making project, selling candy.

The club also talked about the upcoming District III Contest, which will be held at Halifax County High School on Feb. 28.

Persons desiring to enroll in a class or who want information concerning adult education classes may call 352-8253 between the hours of 8:30 5:00.

Pamplin's Carlton Harris honored

J. Carlton Harris of Pamplin has been presented the "Outstanding Forage Producer Award" honorable mention by the Virginia Forage and Grassland Council (VFGC). Harris is commended for his outstanding grassland program, seed production and soil conservation.

Harris' 71 acres of permanent pasture are the background of his farming enterprise. He manages this land for pasture, hay and seed production.

"Carlton has one of the best winter grazing programs using stock-piled fescue in the area," says Bob McClenny, District Conservationist, SCS, and a member of VFGC. "His operation is a fine example of what an enterprising person can do on a small farm," McClenny concludes.

RAYMOND GODSEY, Maintenance Foreman, presents U.S. Department of the Interior length-of-service emblem to Henry T. Chernault, Maintenance Mechanic Leader, who completed 20 years of government service on January 8, 1981, at Appomattox Court House National Historical Park.

Local students honored

Two students at Virginia Tech from Appomattox County were named to the Dean's List at that school during the fall quarter, according to a release from Virginia Tech.

Susan L. Campbell, a sophomore studying general home economics, and Karen F. Carter, a senior studying agricultural education, were both named to the VPI Dean's List for the fall quarter.

Carter made the Dean's List with all 'A's", according to the release.

To earn a place on the Dean's List at VPI, a student must make a 3.4 grade average or better on the university's 4.0 grading scale.

WANTED TO BUY
LOGS DELIVERED TO OUR MILL
TIE LOGS — SAW LOGS
TOP PRICES PAID
FOR MORE INFORMATION
R. S. BURRUSS LUMBER CO., INC.
248-6187 Or
DAVE SANDMAN At 248-6683

Washington's Birthday
SALE!
SALE PRICES PLUS
INSTANT REBATES
ON SOME MODELS
GOOD HONEST SAVINGS!
ON
ALL TVs & APPLIANCES
RCA
RCA XL-100 color consoles—with all these deluxe features
RCA XL-100 25" diagonal
LIST PRICE $779.95
SALE $599.00 Your Choice
LIST $799.95
RCA ColorTrak 25" diagonal
LIST $879.95
The Nichols Model GER092
SALE $679.00
RCA 25" diagonal ColorTrak T.V with ChannelLock Keyboard/Scan Control
RCA SignaLock electronic tuning
Gives you the convenience of single-knob VHF/UHF channel selection plus the reliability of solid state electronics.
RCA's energy-efficient XtendedLife chassis
Designed for long life and low power consumption. Actually uses less energy on average than a 100-watt bulb.
25" diagonal Super AccuColor black matrix picture tube provides bright, detailed color pictures.
Automatic color control and flesh tone correction electronically holds flesh tones and other colors to the settings you select.
Automatic fine tuning pinpoints and holds the correct broadcast signal on each channel.
The Carmania Model GER088
Appomattox RADIO, TV & APPLIANCE
Whirlpool
RCA
809 W. CONFEDERATE BLVD
RT. 460 WEST NEAR PLAZA
APPOMATTOX: 352-7526
CONCORD: 933-2424

WHEN YOUR OPTOMETRIST PRESCRIBES GLASSES AND YOUR
REGISTERED OPTICIAN AT
EHRICH'S
FILLS YOUR PRESCRIPTION, YOU ALSO GET THE GUIDANCE OF A
FASHION EYEWEAR CONSULTANT
NO WONDER SO MANY HAVE SAID
See EHRICH'S And See Better
See EHRICH'S
TO AVAIL YOURSELF OF OUR
COMPLETE SERVICE
EHRICH'S
1107 Main Street
Lynchburg, Va. 24504

OVEN FRESH... $2 OFF!
Delicious fixins' and dough made fresh everyday, served oven fresh and topped with your favorite toppings. That's the kind of Pizza you get at your Appomattox Pizza Hut® restaurant. Aahh.
$2.00 OFF PAN PIZZA.
*2.00 off any large Pan Pizza.
*1.00 off any medium.
Pizza Hut. Phone 352-5096
One coupon per party per visit at Appomattox Pizza Hut® restaurant only. Offer good only on regular menu prices through February 20, 1981. Cash redemption value 1/20 cent. 1981 Pizza Hut, Inc.

photo by Robert E. Pankey

Miss Angela Denise Richardson

Miss Richardson to wed

Mr. and Mrs. James Eugene Richardson, of Pamplin, announce the engagement of their daughter, Angela Denise to Boyce Phillip Seay, son of A. Peyton Seay, of Appomattox, and the late Mrs. Frances G. Seay.

Miss Richardson is a graduate of Appomattox County High School and is presently employed with Armsfrong Furniture in Appomattox.

Mr. Seay, also a graduate of Appomattox County High School, attended Central Virginia Community College in Lynchburg, and is presently employed with the Appomattox County Sheriff's Department!

The wedding will take place April 4 at 7:30 p.m. in Piney Ridge United Methodist Church in Pamplin and following the ceremony the bride's parents will be hosts for a reception in the church social hall.

Friends and relatives are invited to attend.

photo by Allen Austin

Miss Gloria Jean Hodges

Miss Hodges engaged

Mr. and Mrs. William T. Hodges of Evergreen, Virginia, announce the engagement of their daughter, Gloria Jean, to James Edward Baxter,11, son of Mr. and Mrs. James E. Baxter of Appomattox.

Mr. Baxter is a 1979 graduate of Appomattox County High School and is a junior at Virginia Commonwealth University of Richmond, Va.

Miss Hodges is a 1980 graduate of Appomattox County High School and is presently employed at Lynchburg Neurological Center, Lynchburg, Va.

The wedding date has been set for May 9, at 4:00 in the afternoon at Evergreen Baptist Church, Evergreen.

All friends and relatives are invited to attend this special occasion.

Date set for wedding

Elizabeth Hanenkrat Woody of Rustburg and Shelby Cutshall of Appomattox wish to announce their forthcoming marriage.

The wedding will be an event on Saturday, February 14, at 3:00 p.m. at the Yellow Branch Baptist Church at Rustburg. A reception will immediately follow the ceremony in the fellowship hall of the church.

Although no invitations are being sent, relatives and friends are invited to attend.

Book visits

Mrs. Richard Book left Sunday to spend 2 weeks with her daughter and family, Mr. and Mrs. Howard Knoche and Brent Lee of Stafford, Kansas also a new grandson Scott Erin Knoche, while there, she will also visit her mother, Mrs. S. T. Book and other relatives and friends.

Club to meet

The Young Hearts Club will meet Wednesday, February 25 at the Memorial United Methodist Church at 10:30 a.m. Hope we will have a good crowd. There will be a memorial service for Lou Rogers. We also have some business matters and recreation to follow. See you there.

Junior women donate

The Appomattox Junior Woman's Club made donations recently to two local causes.

A check in the amount of $60.00 was presented to the Appomattox Volunteer Fire Department by Gail R. Thompson, treasurer of the club.

Also, a check for $50.00 was presented to the Appomattox Cold Homes Program by Mary Ellen Watson, on behalf of the Home Life Department of the club.

UDC to meet

The Appomattox Chapter of the United Daughters of Confederacy will meet on Thursday, February 19 at 12 noon in the home of Mrs. Hazel Lee Martin for a covered dish luncheon.

All members please make plans to attend this meeting.

Meeting set

The Country Lane Homemakers will meet on Tuesday night, February 17 at 6 p.m. at the home of Gail Craft. Her home is located three miles east on 460, turn left at 634, at the intersection turn left and it will be the fifth house on the left.

The program is on foods; everyone is asked to bring a salad and a low calorie dessert and please bring the recipe used. For more information call Penny Mongold at 352-7023.

Mrs. Ben C. Cole

MRS. BEN C. COLE of Appomattox celebrated her 90th birthday Monday, Feb. 9. She has three children, four grandchildren, and seven great-grandchildren. Mrs. Cole, who celebrated her birthday with friends, says her grandfather was in Appomattox during the surrender, and walked from Appomattox to Danville after the war ended.

Births announced

Mr. and Mrs. Howard Knoche and Brent Lee of Stafford, Kansas announce the arrival of Scott Erin on February 5, 1981. He weighed 6 lbs. 8 oz. at birth.

Maternal grandparents are Mr. and Mrs. Richard Book of Appomattox and paternal grandparents are Mr. and Mrs. Verl Knoche of Stafford, Kansas. Mrs. Howard Knoche is the former Patricia Book.

Mr. and Mrs. James Thomas Ford are proud to announce the birth of their daughter, Anna Louise, on January 17. She weighed seven pounds and nine ounces at birth and was 19 3/4 inches in length. The Fords are also the parents of a son, James Thomas Ford, Jr.

Paternal grandparents are Mr. and Mrs. James R. Ford, Jr. of Appomattox. Maternal grandparents are Captain and Mrs. K. D. Heising of Williamsburg. Maternal great-grandparents are Mr. and Mrs. John Moak of Tigard, Oregon and Mrs. J. J. Heising of Kirkwood Missouri.

Mr. and Mrs. Bryan Moquin wish to announce the birth of their first child, a son, Benjamin Scott, born on January 16, 1981. He weighed nine pounds and eight ounces.

Maternal grandparents are Mr. and Mrs. Munsey Y. Cooter of Cullen, VA; Paternal grandparents are Mr. and Mrs. Denis Moquin of Londonderry N. H.

Reunion planned

A reunion for students of the old Carver-Price School is being planned for the coming months.

All former students of the school are welcome and urged to attend. For information on the reunion contact Carl Moore at 352-7204, or Lewis Fitch at 237-3689.

Also, all committee members will meet at Mrs. Linda Goode's on Saturday February 14 at 4:30 p.m. All are asked to be present, and also all others who would like to attend.

Club meets

The Oakville Extension Homemakers met at Oakville School Feb. 5, at 10:00 a.m. We welcomed one new member into our club. Our Federation subject was "Coffee-The World Cup." A booklet on the subject was given to each member.

Since our program was on Casseroles, each member brought a casserole and we exchanged recipes. At 12:00 noon we enjoyed a covered dish luncheon. We made plans to feed the Ruritans in March and November.

After lunch, Shirley Walton, Extension Agent, conducted a workshop on Macrame. Each one made a key holder and learned the art of making flower pot holders and pocket books.

Our next meeting will be March 5, 1:30 p.m. at Oakville School.

Engagement announced

The engagement of Miss Deborah Lee Tegethoff to William J. Holland Jr. of Riverton, N. J. is announced by her parents, Mr. and Mrs. Richard Tegethoff of Cinnaminson, N.J. The future groom is the son of Mr. and Mrs. Holland of Cherry Hill.

The bride-to-be attended Thomas Jefferson University, Philadelphia. She is employed as a nurse by Burlington County Memorial Hospital.

Her finance attended Glassboro State College, and graduated from the Burlington County Police Academy. He is a patrolman with the Burlington County Bridge Commission Police Department.

The wedding will take place on May. 9.

On keeping poinsettias

By FAYE STEPHENSON
Superior Florist, Nursery & Greenhouses

The poinsettia has a long and interesting history as an ornamental plant and cut flower. In Mexico it was cultivated by the Aztecs, nurtured by the Franciscans and studied by botanists. It was introduced into the United States in the 1820's by Joel Roberts Poinsett, a native of South Carolina, who served as the first United States minister to the government of independent Mexico. Poinsett was a man of many talents - a linguist, a world traveler, a politician, a diplomat and a scientist with a special interest in botany. His federal offices included congressman and secretary of war. He is best remembered, however, for the flaming red flowers he sent from Mexico to his home in Charleston.

Around the turn of the century, florists in Florida and California began stocking their shops with fresh-cut poinsettias at Christmas time, and enterprising home gardeners began growing the plants as shrubs. The development of the potted poinsettia industry - which would in time make poinsettias almost as familiar to Americans as roses and marigolds - began in the 1920's and was almost entirely the work of Paul Ecke.

The Ecke Ranch is now managed by the third generation of poinsettia-raising Eckes.

Each year millions of dollars are spent to enjoy the Beauty of the Christmas flower, the poinsettia. But when the bloom begins to fade and the leaves drop off, what to do to get a poinsettia to bloom again. Of course, a greenhouse is the most ideal place for them at a constant 60 degrees Fahrenheit with high humidity; in a house, temperatures should not exceed 75 degrees during the day and 60 degrees at night and never drop below 50 degrees. The plant should be kept in a bright spot, preferably out of direct sunlight and away from cold drafts excessive heat. Do not place them on TV tops or radiators. Water the poinsettia thoroughly only when the surface of the soil is dry to the touch, pour off any excess water and mist the plant often.

Usually in March or April when the green foliage and colored petals begin to fall off, prune the original stem to a height of 4 to 6 inches above the soil, removing the old flower bracts and most of the side branches. The plant should then be repotted in well-drained soil. The Eckes, who are the worlds largest grower and developer of new species of poinsettias, recommend two parts garden loam or potting soil, one part peat moss and one part sand, with a tablespoon of superphosphate worked into each pot. Fertilize every couple of weeks in the spring and summer and sparingly in the fall once the blooming period has begun. When the weather permits, the plant can be placed outdoors.

Between July 15 and August 1, the poinsettia must be pruned again to produce a compact flowering plant by Christmas. Cut off the terminal portion of the shoots and bring the plant inside before frost. Now comes the tricky and tedious part. To set its buds, the poinsettia needs 10 hours of bright daylight alternating with 14 hours of Complete darkness for about 9 weeks - October 1 to December 15 - and nighttime temperatures not exceeding 60 to 65 degrees. An ideal schedule would be to put the plant in a dark closet or under a cardboard box at 6 p.m. every night and take it out the next morning at 8 a.m., making sure that no light at all reaches the plant during that period. While color should begin to show on red bracts in the mid-November, the light-dark schedule should be continued until the plant is in full bloom.

photo by Robert E. Pankey

Miss Debra Ann McFadden

Miss McFadden to wed

Mr. and Mrs. R. H. (Pete) McFadden of Gladstone are proud to announce the engagement of their daughter, Debra Ann to Roger Dale Hughes, son of Mrs. Thelma G. Hughes, of Appomattox.

Debra is a 1977 graduate of Appomattox County High School and is now employed with Armstrong Furniture in Appomattox.

Dale, a 1972 graduate of Appomattox County High School is also the son of the late Sidney W. Hughes. He is also employed with Armstrong Furniture.

The wedding date has been set for May 9, 1981 at 7:00 in the evening at Maple Grove Baptist Church in Gladstone.

Although no invitations are being issued, friends and relatives are invited to attend.

In last week's paper, the story announcing the engagement of Debra Ann McFadden and Roger Dale Hughes was erroneously headlined, "Couple announce birth."

This was the newspaper's error, and we regret any inconvenience it may have caused.

MRS. DAVID B. WHITE, [SHARON], has just been informed that she is the winner of a trophy and a check in the amount of $100.00 for being the leading salesperson in December for the Electrolux Corporation in the Eastern United States sales area. Sharon, assistant manager from the Lynchburg branch, helped lead her branch to win the National Sales Cup in sales and service in December of 1980. She wishes to thank all her customers in the area for their help.

MRS. PAT PAULETTE, chairman of the Mental Health Committee of the Appomattox Junior Woman's Club is shown presenting a check to Ray Noble, captain of the Appomattox County Volunteer Rescue Squad. The funds will be used for general support of the local rescue squad.

Get Results! Use The Times-Virginian Classified Ads

NOW OPEN!
Sarah Summers
Secretarial Service
Lower Level - Triangle Plaza
Wed. & Friday 9 - 5
352-8952
"All Types of Typing"

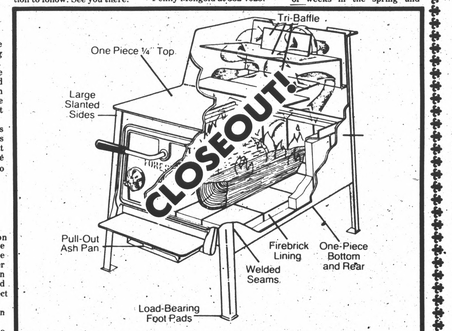

CLOSEOUT ON ALL WOODSTOVES
NO REASONABLE OFFER REFUSED
COME IN — MAKE AN OFFER!
Appomattox RADIO, TV & APPLIANCE
RCA
Whirlpool
809 W. CONFEDERATE BLVD
RT. 460 WEST NEAR PLAZA
APPOMATTOX: 352-7526
CONCORD: 933-2424

Valentine Special

One dozen red silk roses arranged in a vase as a reminder of your love that won't fade.
$15.00 PLUS TAX
Order Early.
Valentine Cut Flower ARRANGEMENT
$10.00
CASH & CARRY
Superior Florist
Highway 26
PHONE: 352-7624